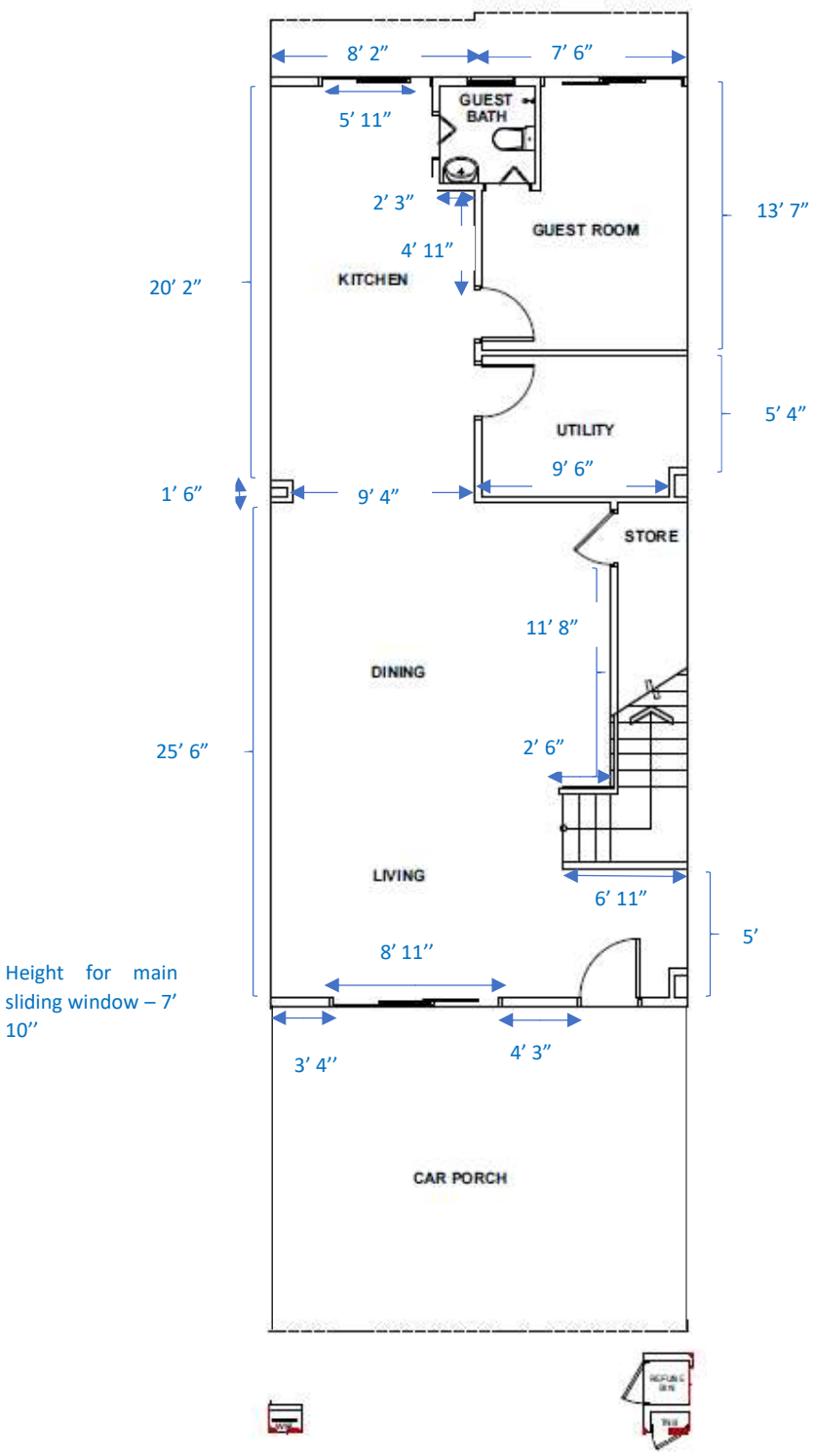

Height for main sliding window – 7' 10''

Ground Floor
Unit - 318
Type B (Intermediate)

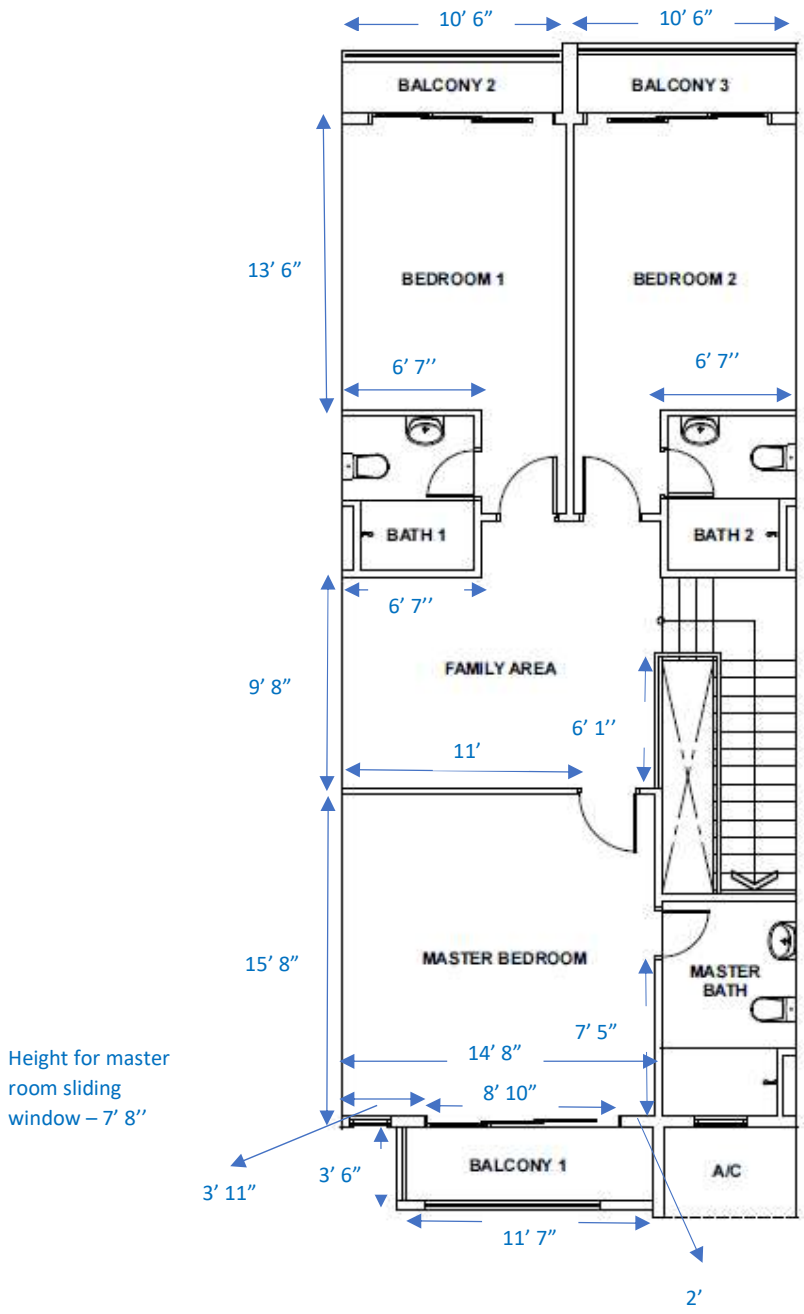

First Floor
Unit - 318
Type B (Intermediate)